101 SERIES

D-SUB DIP STRAIGHT TYPE

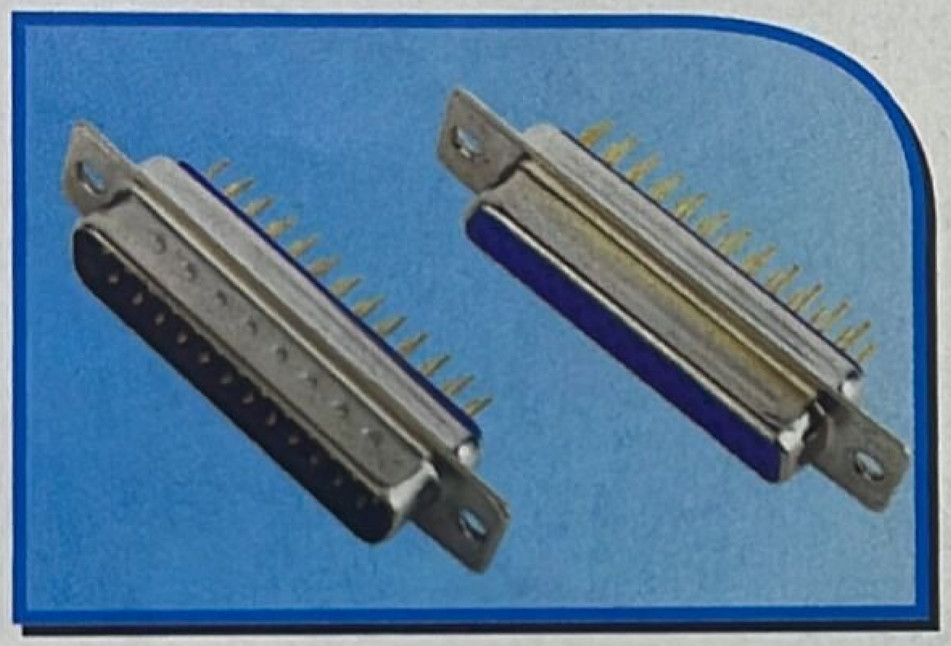

Position	A	B	C	D	E
9	17.78	24.99	30.81	19.36	16.20
15	26.15	33.32	39.20	27.64	24.66
25	39.94	47.04	53.10	41.08	38.65
37	56.56	63.50	69.50	57.38	54.84

Specifications:

Contact Resistance: 30mΩ max.at DC 100 mA
Insulator Resistance: 1000MΩ min.at DC 500V
Current Rating: 5AMP

Dielectric Withstanding

Voltage: AC 1000V For 1 minute
Operating Temperature: -55° C--+105° C
Contact: Brass or Phosphor Bronze
Housing: PBT &30% Glass Fiber(UL 94V-0)

How To Order

101 - 09 P C B N S
1 2 3 4 5 6 7

- 1 — SERIES NO
- 2 — NO.OF PINS: 09.15.25.37.
- 3 — CONTACT TYPE: P-MALE, S-FEMALE
- 4 — SHELL PLATED: C-CHROMATED SHELL, T-TIN SHELL
- 5 — OPTION ON INSULATOR: B-BLUE, K-BLACK, W-WHITE
- 6 — OPTION ON SCREW: N-W/O SCREWS, Y-WITH SCREW(4-40UNC)
- 7 — PIN TYPE: S-STAMPED PIN

MALE

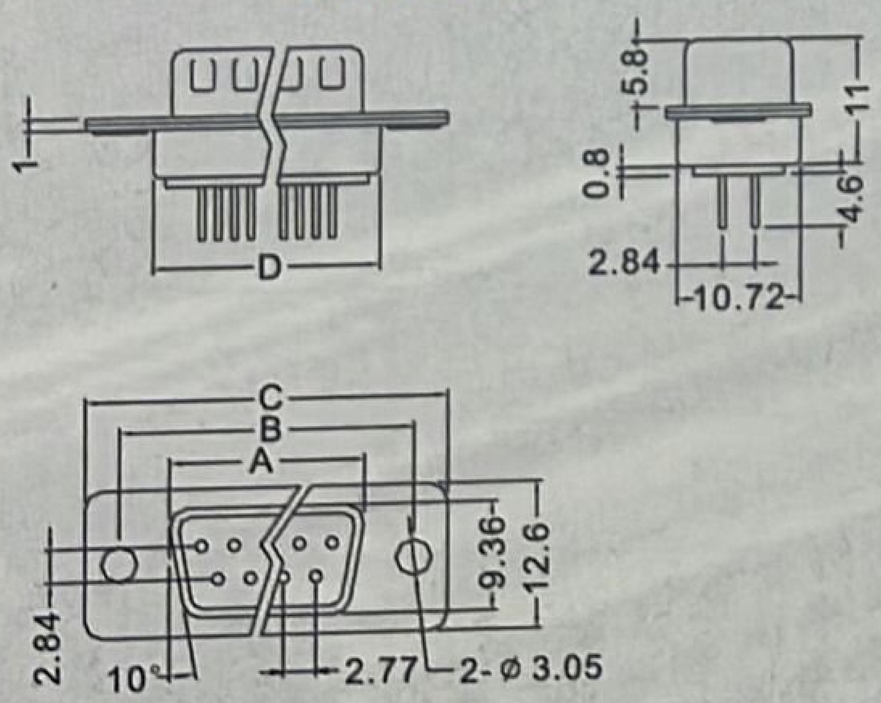
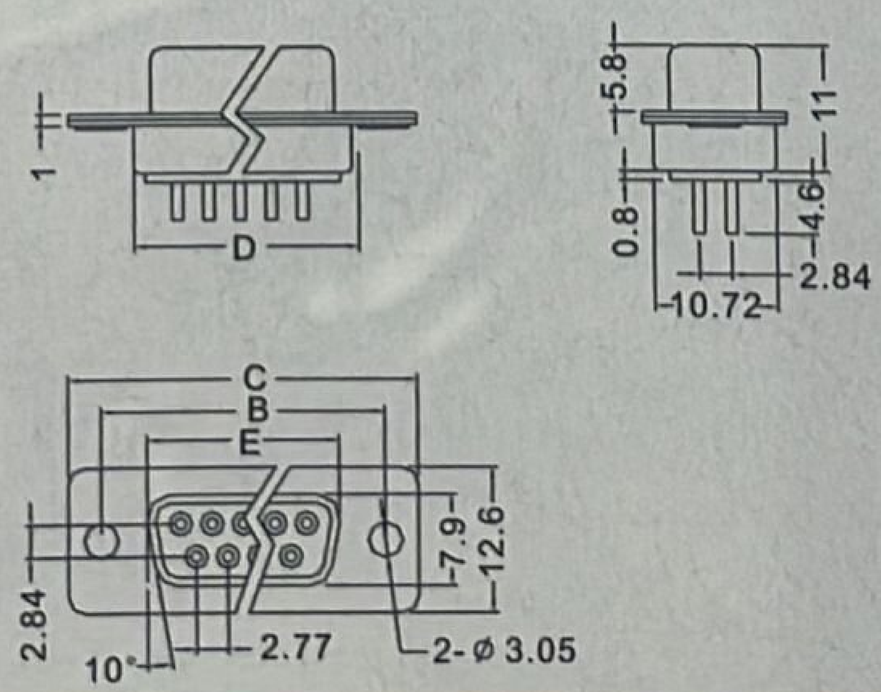
FEMALE