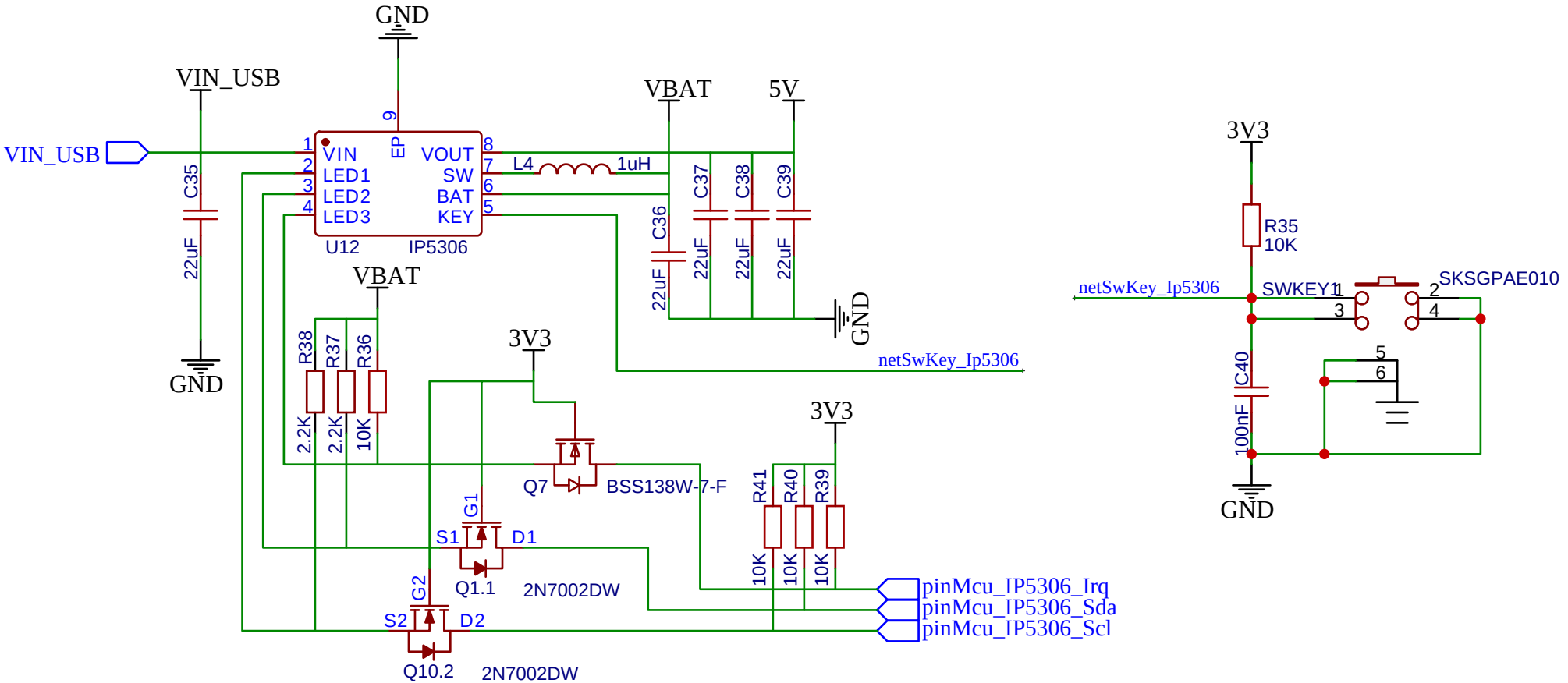
GND
VIN_USB
VIN_USB
C35
22uF
GND
9
EP
1
VIN
2
LED1
3
LED2
4
LED3
VOUT
8
SW
7
BAT
6
KEY
5
U12
IP5306
L4
1uH
VBAT
5V
C36
22uF
C37
22uF
C38
22uF
C39
22uF
GND
netSwKey_Ip5306
VBAT
R38
2.2K
R37
2.2K
R36
10K
3V3
Q7
BSS138W-7-F
G1
S1
D1
Q1.1
2N7002DW
G2
S2
D2
Q10.2
2N7002DW
3V3
R41
10K
R40
10K
R39
10K
pinMcu_IP5306_Irq
pinMcu_IP5306_Sda
pinMcu_IP5306_Scl
3V3
R35
10K
netSwKey_Ip5306
SWKEY1
1
2
3
4
SKSGPAE010
5
6
C40
100nF
GND